DIGIPRESSURE

Digital Multi Pressure Switch & Gauge

GREEN SYSTEM CO, INC
#701 KOPOMO Techno Center, 341 (Jeongwang-dong) Gongdan1-daero, Siheung-si, Gyeonggi-do
Tel. 031-432-8843 Fax. 031-601-8600

sales@digipressure.com digipressure@gmail.com
http://www.digipressure.com http://www.digip.kr

GREETINGS

Since its foundation in 2004, Green System created an integrated type of refrigerator pressure gauge and pressure switch. It was added by sensor and digital technology. As a result, we dreamed of export of our products while more than 90% of refrigerator parts industry was covered by foreign companies such as saginomiya (Japan), Alco (USA), Danofoss and Johnson Control.

In January 2007, we specified our business by trademark patent registration under DIGIPRESSURE, and in May 2007, we finally achieved in 3 years the patent registration with 'refrigerator control digital multi-pressure switch.'

DIGIPRESSURE of Green System is the transformation of mechanical parts, and digitalization of existing mechanic pressure gauge and pressure switch. We integrated 4 pressure gauges, 1 dual pressure switch, 1 oil pressure switch and 3 fan control switches in one device with remote monitoring and control available. It is the core safety device for refrigerator that has simplified control function and that employs high precision pressure sensor for the first in the industry. It is easy to install and application with economic price compared to with other products. it is compatible with low and high pressure and micom processor. It is designed to have 1~4 sensors in multi-pressure switch and to input decimal unit of multi-pressure. As sensor detects pressure on real-time basis, it marks by decimal unit in LED and LCD for easy and rapid value reading. Data communication, which was not available in existing analogue device, has been added to bring facility automation and remote control network feature to DIGIPRESSURE.

Company history

2004 "OK Air-conditioning" founded

2005 "Digital pressure switch" developed (DPC model)
KOPOMO Techno Center moved-in

2006 Renamed to Green System.
The 8th Korea International Air-conditioning contest participated
"Digital multi-pressure switch" developed (MPC model)
Hanyang University family company registered
Kyonggi Technical University family company registered

2007 "DIGIPRESSURE" trademark registered
"Refrigerator control digital multi-pressure switch" utility model registered
The 9th Korea International Air-conditioning contest participated
"Refrigerator control digital multi-pressure switch" patent registered
Clean workplace appointed

2008 Belarus MPC/DPC export
DPC-SERIES "CE" certification

2009 Fire prevention "pressure switch" development started
Turkey sample export
Korea Institute of Science and Technology Information Gyeonggi Area
Advisory committee appointed
The 10th Korea International Air-conditioning contest participated
Philippines DPC export
Gyeonggi Internet Trading Frontier company appointed (2009.10~2011.10)
Turkey 2nd export

2010 Belarus MPC/DPC-HLexport, Philippines DPC-HL export
Fire prevention "pressure switch" developed
R&D department accredited (Korea Industrial Technology Association)
Part material specialty company accredited (Korea Technology Center)
Turkey DPC-HL export
Russia MPC-HLO export
Gyeonggi Technology University family company registered
MPC-SERIES "CE" certification
ISO 9001 certification
RSA MPC-HLO export
Netherlands DPC-SERIES export

2011 Turkey export MPC-HLO / DPC-HL
RSA 2nd export
Korea International Air-conditioning contest participated
Turkey export MPC-HLO / DPC-HL export
New Zealand DPC export
Egypt export
RSA 3rd export
New Zealand export
Ukraine export
Germany (LEITENBERGER) export
DPC2- CE certification
Expansion and relocation of work place
Venture company registered

2012 EEV controler developed supply started
LPC differential pressure switch development supply started
screw/reciprocating oil pressure switch supply started (DPC-DF)
FAN SPEED controler development supply started (DPF-HL)
New Zealand export
Thailand MPC-HLO export
Philippines DPC-HL export

2013 Brazil DPC-HL order obtained
The 12th Korea International Air-conditioning contest participated
Iran MPC-HLO/DPC-HL order obtained
Singapore MPC-HLOW order obtained

Certificates

What is DIGIPRESSURE?

DIGIPRESSURE is the patent trademark of refrigerator control digital multi-pressure switch that is an integration of pressure gauge and pressure switch for high pressure, low pressure, hydraulic pressure and heavy pressure of refrigerator by employing convergence technology. Different from existing mechanic based Bourdon tube elasticity switch, DIGIPRESSURE improves precision and accuracy innovatively and is a core safety device of refrigerator with high precision and digital technology for the first in the industry.
Compare with Saginomiya (Japan), Alco (USA), Danfoss, Johnson Control (Netherlands), Honeywell (USA) distributed in Korea, DIGIPRESSURE is outstanding in performance and structural innovation, and was the first replacement part of imported goods. Starting with the export to Russian federation (Belarus) in 2008, it has been exported to Philippines in, Turkey and India in 2010, Turkey, RSA, Netherlands in 2011. And dealerships were established in Turkey and RSA to find opportunities of export to Europe.
And we have developed special items of refrigerator including equipment filter, coil, digital differential pressure switch that controls chamber differential pressure, fan speed controller and EEV controller. We will make every effort to be recognized in overseas markets more prominently.

Features and merits of DIGIPRESSURE

- Easy and accurate to use and convenient
- Replaces multiple pressure gauge and switches in one
- Rapid installation and application
- Compatible to all kinds of pressure
- Excellent in the use of supermarket multi rack system and freezing warehouse
- Accurate operation with thermostat, cooler and heat pump
- Remote controlling and monitoring through communication (RS-485 MODBUS-RTU)
- Inverter and condenser fan speed control available
- Economic price for changing everything

Basic specification of DIGIPRESSURE

Device	+	Applicable type
DPC-HL	—	High/low voltage (scroll, reciprocating, rotary)
DPC-DIF	—	1st, 2nd differential pressure switch
MPC-HL	—	Dedicate to Screw, scroll tandem chiller
MPC-HLO	—	Dedicated to oil pump type semi-hermetic chiller
MPC-HLOM	—	Dedicate to oil pump type double semi-hermetic chiller
MPC-H2L2	—	2 STEP chiller (thermostat)
MPC-H4&L4	—	Dedicate to multi rack system high/ low pressure 4 devices

DPC SERIES

Installation picture

Installation reference figure

Application installation map

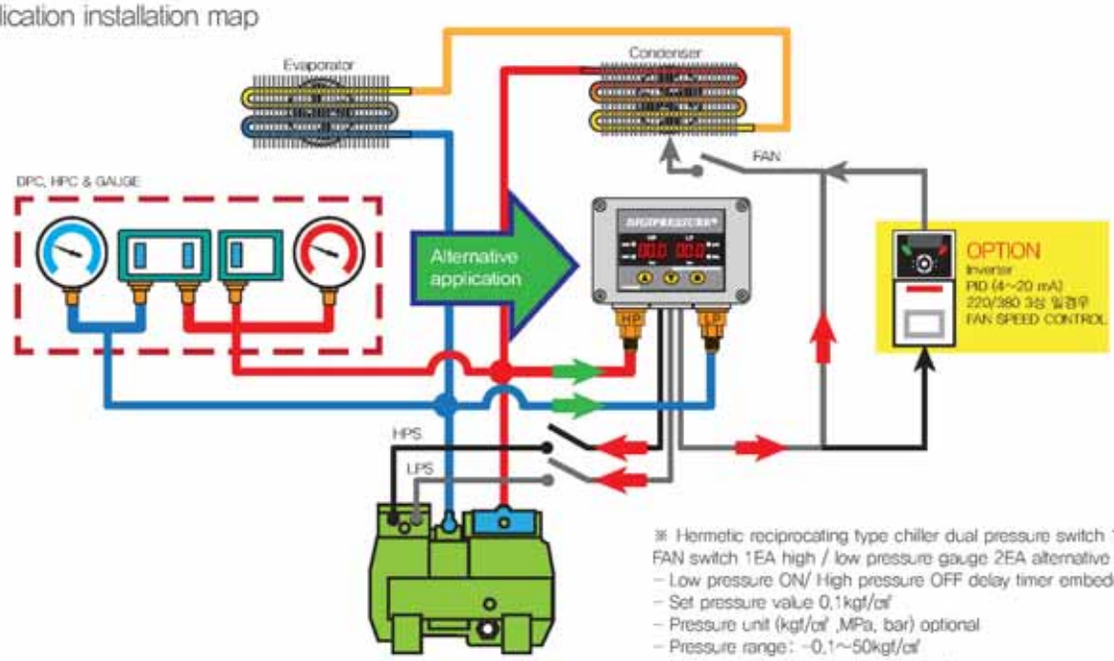

※ Hermetic reciprocating type chiller dual pressure switch 1EA
FAN switch 1EA high / low pressure gauge 2EA alternative application
- Low pressure ON/ High pressure OFF delay timer embedded
- Set pressure value 0.1kgf/㎠
- Pressure unit (kgf/㎠ ,MPa, bar) optional
- Pressure range : -0.1~50kgf/㎠
- Pressure calibration function applied

Order specification
- Inverter control high/low pressure PID control
- Communication RS-485, output current (4-20mA)

Assembly planar figure

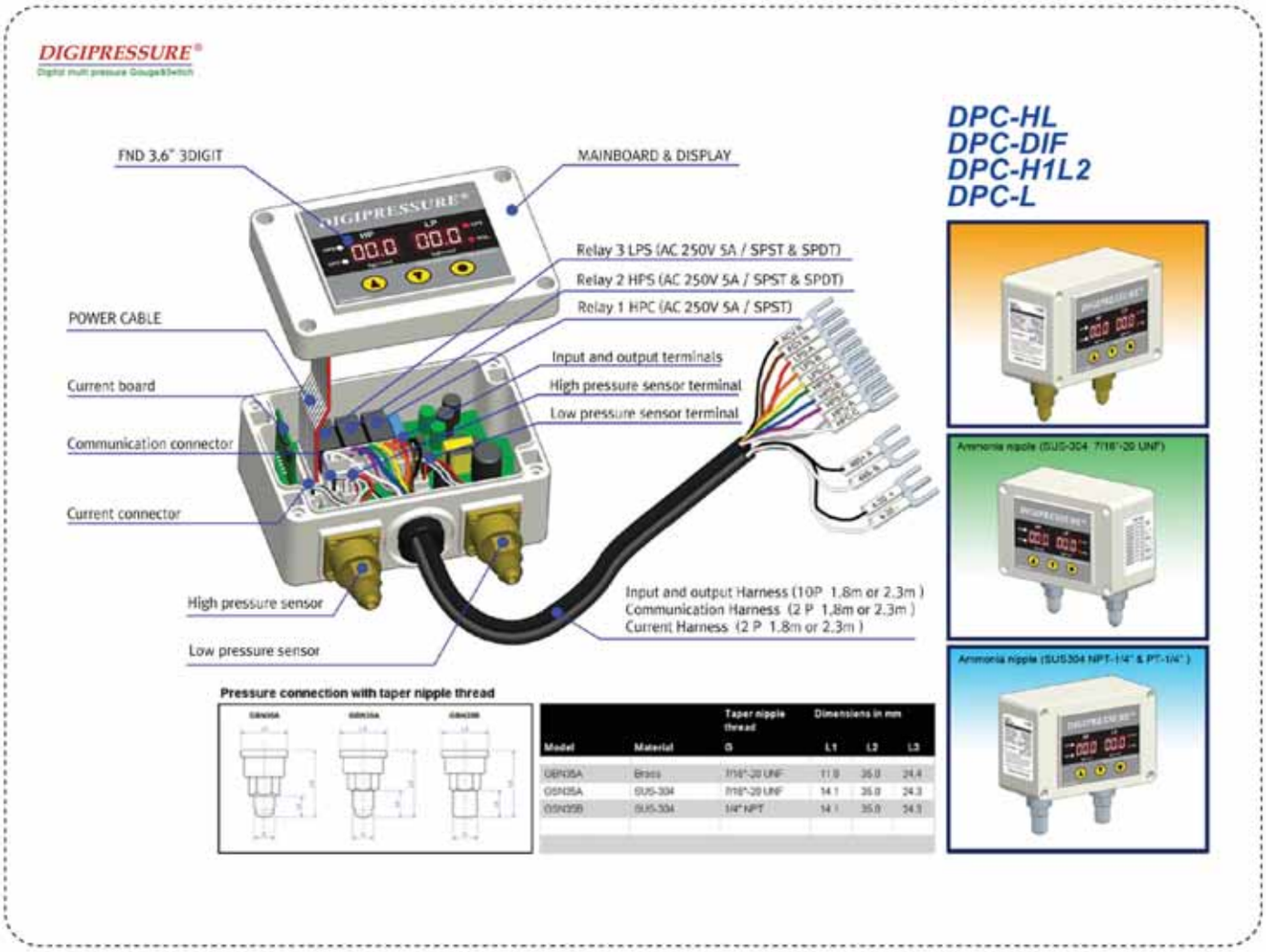

Model	Material	Taper nipple thread D	Dimensions in mm L1	L2	L3
GBN05A	Brass	7/16"-20 UNF	11.0	35.0	24.4
GSN05A	SUS-304	7/16"-20 UNF	14.1	35.0	24.3
GSN05B	SUS-304	1/4" NPT	14.1	35.0	24.3

Specification

DPC SERIES		Specification	Function	sensor	OUTPUT LP	HP	DIF	FAN	-	전류 (Option)	RS-485통신 (Option)
	DPC-HL	-1.0~50 kgf/Mpa/Bar	Replace hermetic reciprocating type chiller high pressure 1 EA, low pressure 1 EA, Fan control 1 EA, pressure switch and pressure gauge	2	1	1		1		○	○
	DPC-H1L2		Replace hermetic reciprocating type chiller high pressure 1 EA, low pressure 2 EA, pressure switch and pressure gauge	2	2	1				○	○
	DPC-DIF		Fluid control filter system control output	2	1	1	1			○	○
	DPC-L	-1.0~10,20,30,50 Kgf/Mpa/Bar	Compressor pressure control 2 and 3 levels alteration and volume control, Fan 3 level control	1	P1 / 1	P2 / 1	P3 / 1	-	-	○	○
	DPC-L-100	0~100 kgf/Mpa/Bar		1	1	1	1			○	○
	DPC-L-200	0~200 kgf/Mpa/Bar		1	1	1	1			○	○
	DPC-L-600	0~600 kgf/Mpa/Bar		1	1	1	1			○	○

DPC-HL

Pressure Sensor 2 EA (low pressure/high pressure)

- Reciprocating semi-hermetic type oil pressure switch included
- Low pressure 1 EA, high pressure 1 EA, oil pressure switch 1 EA, FAN control 3 EA
- Low pressure ON / high pressure OFF delay timer embedded
- Pressure value set 0.1 kgf/㎠ input available
- Pressure unit (kgf/㎠, Mpa, Bar) Option when order is made

Alternative application figure

- Power supply : 100-240V~ 10% / 50-60hz, 24VDC
- Current : 200mA
- Indicator : 0.36" 3 Digit FND x 2 for HP & LP
- Pressure range : -1.0 ~ 10~50 Kgf/㎠ (Both Low & High)
- Output contact point : Output CABLE 8P: (SPST 250V/ 3A) ,
  Output CABLE 10P: HPS & LPS(SPDT 250V/ 3A) HPC (SPST 250V 5A)
- Temperature : -20~60℃ RH 60%
- Sensor precision : 0.5% FS
- Communication applied : RS-485 MODBUS RTU (Option)
- Current output applied : (Option)

(Current output range : 0-10 ~ 50Kgf/㎠ (4-20mA))

(R22,23,134,410,404,407,507 refrigerant temperature conversion function applied)

Other refrigerants to be ordered

DPC-DIF

Pressure Sensor 2 EA (low pressure/high pressure)

- Oil pressure differential pressure control output (filter and input/output differential pressure switch replacement)
- low pressure 1EA, high pressure 1 EA, differential pressure control 1 EA
- low pressure / high pressure delay timer embedded
- Deviation ON delay timer embedded
- Pressure value set 0.1 kgf/㎠ input available
- Pressure unit (kgf/㎠, Mpa, Bar) Option when order is made

Alternative application figure

- Power supply: 100-240V~ 10% 50-60hz, 24VDC order specification
- Current: 200mA
- Indicator: 0.36" 3 Digit FND x 2 for HP & LP
- Pressure range: -1.0~50 Kgf/㎠ (Both Low & High)
- Output contact point: HPS & LPS SPDT 250V/ 3A DPS SPST 250V/3A
- Temperature: -20~60℃ RH 60%
- Sensor precision: 0.5%FS
- Communication applied: RS-485 MODBUS RTU (Option)
- Current output applied: (Option)

(Current output range: 0-10 ~ 50Kgf/㎠ (4-20mA))

(Refrigerant temperature conversion function applied)

DPC-H1L2

Pressure Sensor 2 EA (low pressure/high pressure)

- Low pressure control switch 1 EA addition type
- (Defrosting cycle, loading/unloading Compressor volume control used)
- low pressure 2 EA, high pressure 1 EA
- low pressure ON/OFF high pressure OFF delay timer embedded
- Pressure value set 0,1 kgf/㎠ input available
- Pressure unit (kgf/㎠, Mpa, Bar) Option when order is made

Alternative application figure

- Power supply: 100~240V~ 10% / 50~60hz, 24VDC order specification
- Current: 200mA
- Indicator: 0,36" 3 Digit FND x 2 for HP & LP
- Pressure range: -1,0~50 Kgf/㎠ (Both Low & High)
- Output contact point: HPS & LPS: SPDT 250V/ 3A
- Temperature: -20~60℃ RH 60%
- Sensor precision: 0,5% FS
- Communication applied: RS-485 MODBUS RTU (Option)
- Current output applied: (Option)

(Current output range: 0~10 ~ 50Kgf/㎠ (4~20mA))

R22,23,134,410,404,407,507(Refrigerant temperature conversion function applied)

DPC-L

Pressure Sensor 1 EA (low pressure)

- Hermetic reciprocating type screw/scroll type chiller control
- (CO2 L-200/600 model applied)
- low pressure 3 EA
  (alteration control, relay Output rotation function)
- low pressure ON delay timer embedded
- Pressure value set 0,1 kgf/㎠ input available
- Pressure unit (kgf/㎠, Mpa, Bar) Option when order is made

Alternative application figure

- Power supply: 100~240V~ 10% / 50~60hz, 24VDC order specification
- Current: 200mA
- Indicator: 0,36" 3 Digit FND x 2 for LP
- Pressure range: -1,0~50 Kgf/㎠ (Both Low & High)
- Output contact point: HPS & LPS: SPDT 250V/ 3A
- Temperature: -20~60℃ RH 60%
- Sensor precision: 0,5% FS
- Communication applied: RS-485 MODBUS RTU (Option)
- Current output applied: (Option)

(Current output range: 0~50Kgf/㎠ (4~20mA))

(Refrigerant temperature conversion function applied)

DPF SERIES

Installation reference figure

Application installation map

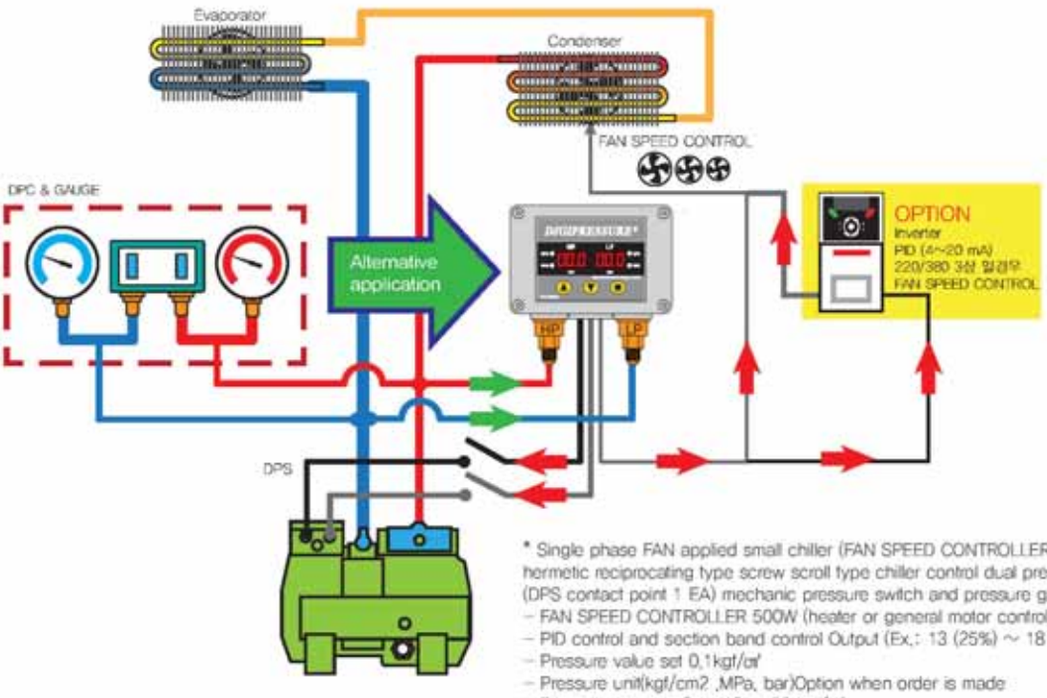

* Single phase FAN applied small chiller (FAN SPEED CONTROLLER 500W)
hermetic reciprocating type screw scroll type chiller control dual pressure switch
(DPS contact point 1 EA) mechanic pressure switch and pressure gauge Alternative application

- FAN SPEED CONTROLLER 500W (heater or general motor control output available)
- PID control and section band control Output (Ex.: 13 (25%) ~ 18 (100%) kgf/cm2 control output)
- Pressure value set 0.1kgf/㎠
- Pressure unit(kgf/cm2 ,MPa, bar)Option when order is made
- Pressure range: -0.1~10 ~ 50 kgf/㎠

Assembly planar figure

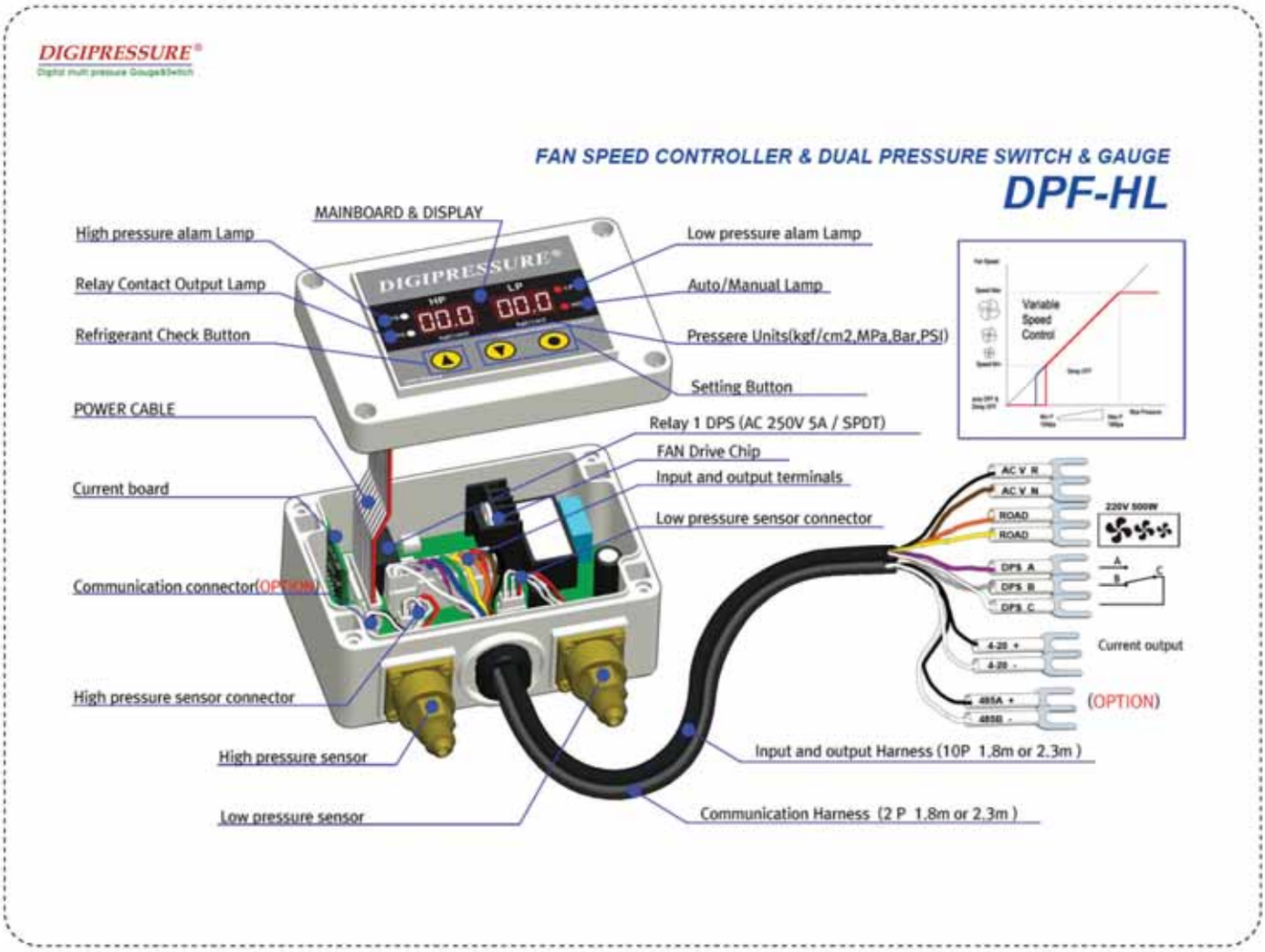

Specification

DPC SERIES		Specification	Function	Sensor	OUTPUT			current (option)	RS-485 (option)	note
					Output	Input	phase control			
	DPF-HL	-1.0~50 kgf/Mpa/Bar	FAN (PUMP) SPEED control 220V 500W DPS Output 1 EA External input 1 EA (When defrosted, ON/OFF)	2	1	1	single phase 1Ø	○	○	Order for over 220 V/ 500W
	DPF-L	-1.0~10,20,30,50 kgf/Mpa/Bar	Output contact point 1 EA Input check 1 EA FAN (PUMP) SPEED control 220V 500W	1	1	1	single phase 1Ø	○	○	Order for over 220 V/ 500W

DPF-HL

Pressure Sensor 2 EA (low pressure/high pressure)

- Reciprocaling semi-hermetic type oil pressure switch included
- Low pressure 1 EA, high pressure 1 EA, oil pressure switch 1 EA, FAN control 3 EA
- Low pressure ON / high pressure OFF delay timer embedded
- Pressure value set 0.1 kgf/㎠ input available
- Pressure unit (kgf/cm2, Mpa, Bar) Option when order is made

- Power supply : 100~240V~ 10% 50~60hz
- Current : 200mA (부하:500W별도)
- Indicator : 0.36" 3 Digit FND x 2 for HP & LP
- Pressure range : -1.0~ 50 Kgf/㎠ (Both Low & High)
- Output contact point : DPS: SPDT 250V/ 3A, FAN SPEED CONTROL : 220V 500W
- Temperature : -20~60℃ RH 60%
- Sensor precision : 0.5% FS
- Communication applied : RS-485MODBUS RTU (Option)
- Current output applied : (Option)

  (Current output range: 0~10~50Kgf/cm2 (4~20mA)

  (refrigerant temperature conversion function applied)

DPF-L

Pressure Sensor 1 EA (low pressure)

- Hermetic reciprocaling type screw/scroll type chiller preessure control
- low pressure 1 EA, FAN SPEED control 1 EA
- low pressure ON/ high pressure OFF delay timer embedded
- Pressure value set 0.1 kgf/cm2 input available
- Pressure unit (kgf/cm2, Mpa, Bar) Option when order is made

- Power supply : 100~240V~ 10% 50~60hz
- Current : 200mA
- Indicator : 3 Digit FND x 2 for LP
- Pressure range : -1.0~50 Kgf/㎠ (Both Low & High)
- Output contact point : SPDT 250V/ 3A
- Temperature : -20~60℃ RH 60%
- Sensor precision: 0.5%
- Communication applied : RS-485 (Option)
- Current output applied : (Option)

  (Current output range: 0~50Kgf/㎠ (4~20mA)

  (Refrigerant temperature conversion function applied)

LPC SERIES

Installation picture

Installation reference figure

Application installation map

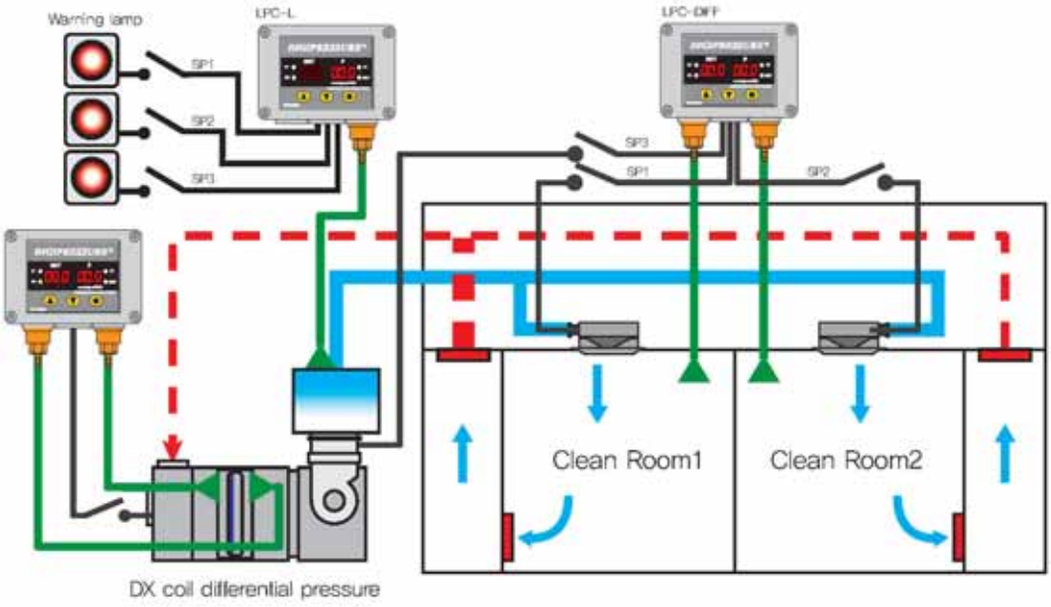

* Air-conditioner filter, coil, FAN differential pressure control, clean room pressure control and filter differential pressure
(Wind pressure) slight pressure1 EA/2 EA, Output relay 3 EA, relay alteration control, mechanic pressure switch and pressure gauge Alternative application
- ROT function embedded pressure control, 1mmAq Deviation control, delay timer embedded
- Pressure unit (mmAq (mmH2O))
- Pressure range: -70~600 mmAq

Assembly planar figure

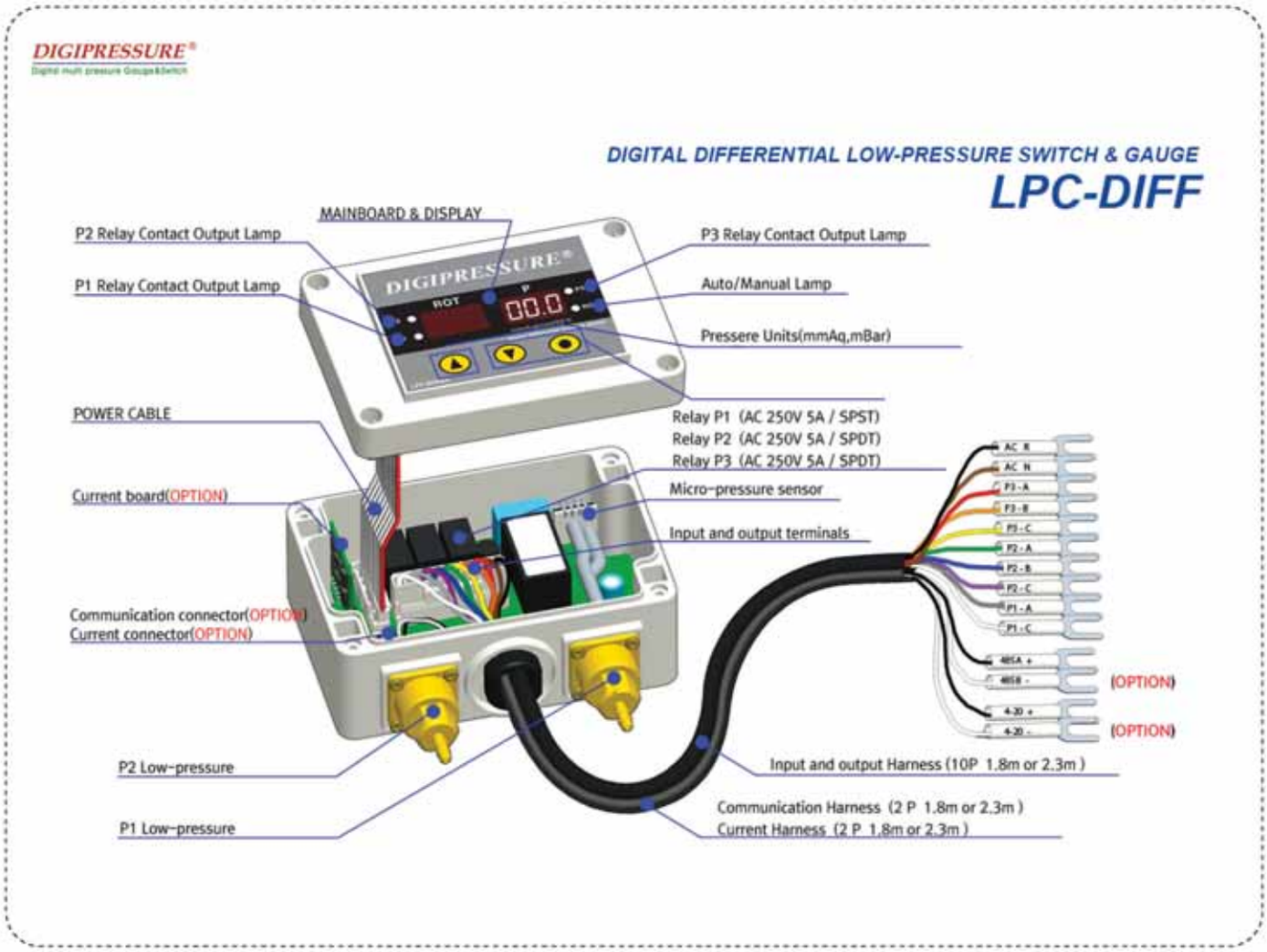

Specification

LPC SERIES		Specification	Application Funtion	Sensor	OUTPUT P1	P2	P3	Current (Option)	RS-485 (Option)	note
	LPC-L (slight pressure)	-70~600 mmAq -100~100 mmAq	Wind pressure switch and cooler defrost switch (3-level switch embedded)	1	1	1	1	○	○	
	LPC-DIFF (slight pressure)	-70~600 mmAq -100~100 mmAq	Coil, filter, chamber, clean room, FAN differential pressure switch applied CM: RS-485 AI: 4~20mA Output DI: external input(operation/stop)	2	1	1	1	○	○	

LPC-DIFF

Precision slight pressure differential pressure sensor embedded

- Air-conditioner filter, heat exchange coil, FAN differential pressure control/ clean room
- Each room differential pressure control and filter differential pressure/ boiler burner differential pressure control
- Output relay contact point 3 EA
- Differential pressure ON/OFF delay timer embedded
- Pressure value set 0.01 mmAq input available

Alternative application figure

- Power supply: 100-240V~ 10% / 50-60hz (24VDC Option)
- Current: 200mA
- Indicator: 0.36" 3 Digit FND x 2 for HP & LP
- Pressure range: -100~100 mmAq (mmH2O), 600mmaq (6kpa)order specification
- Output contact point: SPDT 250V / 3A
- Temperature: -20~70℃ RH 60%
- Sensor precision: 0.5% FS
- Communication applied: RS-485 MODBUS RTU (Option)
- Current output applied: (Option) Current output range: 0-50kgf/cm2 (4-20mA)

LPC-L

Precision differential pressure sensor embedded

- Wind pressure (slight pressure) pressure switch /Air filter digital rated pressure switch(differential pressure switch) /clean room chamber pressure switch
- relay contact point Output 3 EA
- Each output ON/OFF delay timer embedded
- Pressure value set 0.01 mmAq input available

Alternative application figure

- Power supply: 100-240V~ 10% / 50-60hz, 24VDC order specification
- Current: 200mA
- Indicator: 3 Digit FND x 2 for ROT & LP
- Pressure range: -100~100(600) mmAq(mmH2O
- Output contact point: SPDT 250V/ 3A
- Temperature: -20~60℃ RH 60%
- Sensor precision: 0.5% FS
- Communication applied: RS-485 MODBUS RTU (Option)
- Current output applied: (Option)

(Current output range: 0-100 & 600mmH2O or 6Kpa (4-20mA))

MPC SERIES

Installation picture

Installation reference figure

Application installation map

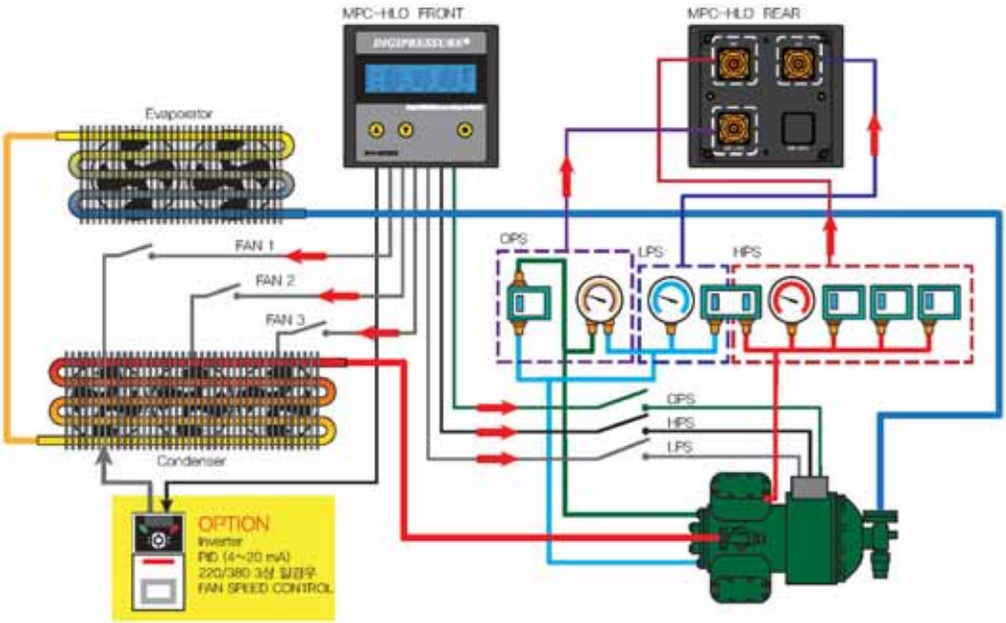

* Oil pump embedded semi-hermetic type chiller high pressure1 EA, low pressure1 EA, oil pressure 1 EA and Fan control 3 EA pressure switch and pressure gauge replacement
- oil pressure switch embedded
- Pressure value set 0.1kgf/㎠
- Pressure unit conversion mode embedded (kgf/㎠, MPa, bar, Psig)
- high pressure, low pressure refrigerant conversion temperature indication (℃/℉)

order specification: - inverter control high/low pressure PID control
- communication RS-485, Current output(4-20mA)

Assembly planar figure

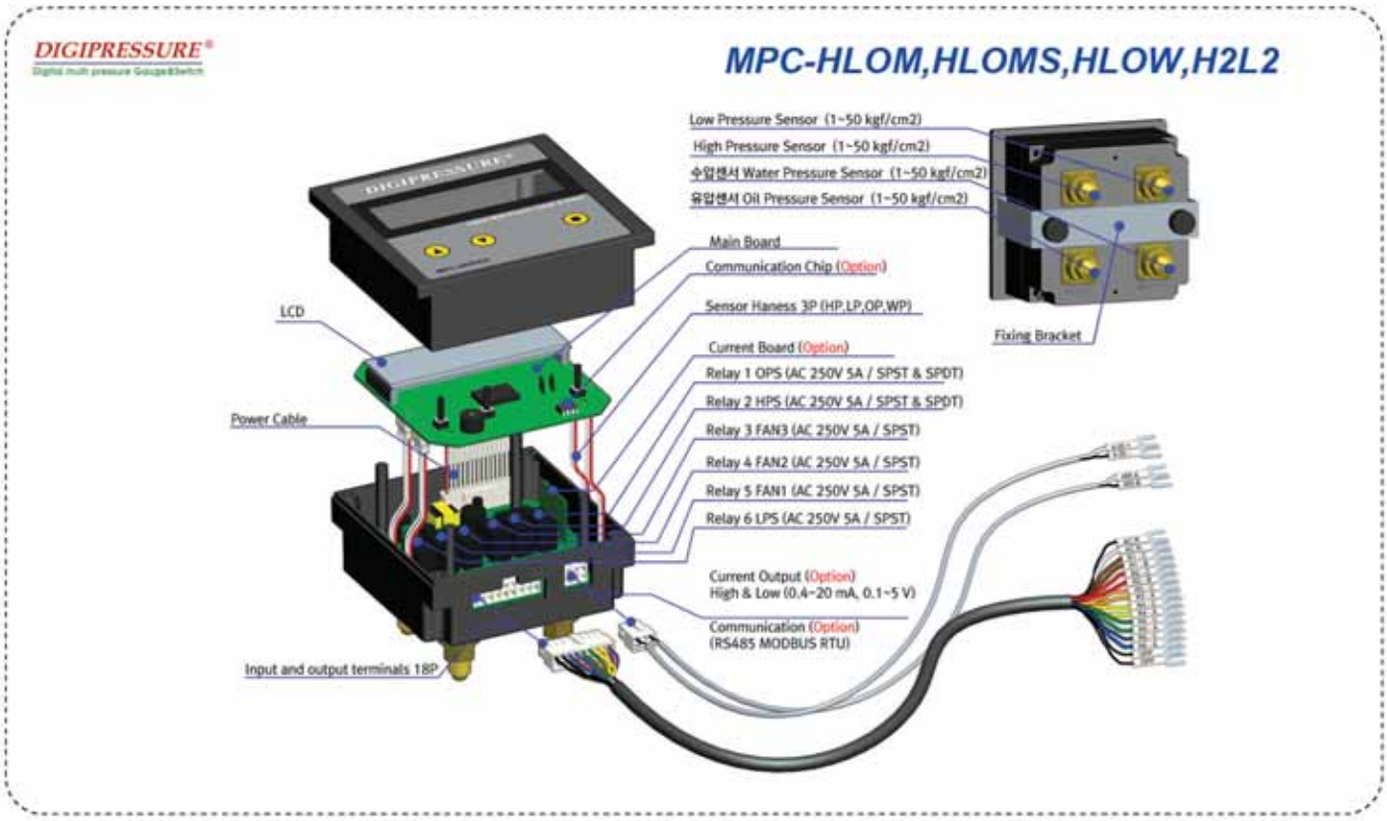

Specification

MPC SERIES		Specification	Funtion	Sensor	OUTPUT SP/WP	LP	OP	HP	FAN	Current (Option)	RS-485 (Option)
	MPC-HLOM	-1.0~50 kgf/Mpa/Bar	Heavy pressure/oil pressure comparison 2-level, semi-hermatic type chiller high pressure 4 EA(FAN control3 EA Included), low pressure 1 EA, oil pressure 1 EA and pressure switch and pressure gauge replacement	4		1	1	1	3	○	○
	MPC-HLOMS		High pressure/oil pressure comparison 2-level screw chiller high pressure 4 EA(FAN control3 EA Included),low pressure1 EA, oil pressure 1 EA and pressure switch and pressure gauge replacement	4		1	1	1	3	○	○
	MPC-HLOW		Semi-hermatic type Compressor (WATER & AIR control) high pressure3 EA (FAN control 2 EA included),low pressure1 EA, oil pressure 1 EA, water pressure 1 EA and pressure switch and pressure gauge replacement (chiller cooler applied)	4	1	1	1	1	2	○	○
	MPC_HLOWS		Semi-hermatic type chiller high pressure1 EA, low pressure1 EA, oil pressure 1 EA, water pressure 1 EA and FAN control 2 EA pressure switch and pressure gauge replacement (chiller cooler applied)	4	(SWP)	1	1	1	2	○	○
	MPC_H2L2		Dual chilling and 2 CYC1E Compressor operating high pressure2 EA, low pressure2 EA and FAN control2 EA pressure switch and pressure gauge replacement (thermostat 2STEP tandem type)	4		2		2	2	○	○
	MPC-HLO	-1.0~50 kgf/Mpa/Bar	OP applied semi-hermatic type chiller high pressure 4 EA (FAN control3 EA Included),low pressure1 EA, oil pressure 1 EA pressure switch and pressure gauge replacement	3		1	1	1	3	○	○
	MPC-HLO-L2		Capacity control semi-hermatic type chiller high pressure3 EA(FAN control2 EA), low pressure2 EA, oil pressure 1 EA pressure switch and pressure gauge replacement	3		2	1	1	2	○	○
	MPC-HLOS		Screw Compressor (oil warning: HP - OP = OPS) high pressure1 EA (FAN control3 EA Included),low pressure1 EA, oil pressure 1 EA pressure switch and pressure gauge replacement	3		1	1	1	3	○	○
	MPC-HLW		Hermetic reciprocating type chiller and AIR, water pressure control compatible high pressure3 EA(FAN control2 EA Included),low pressure 2 EA, water pressure 1 EA Pressure switch and pressure gauge replacement (air drier, screw chiller type)	3	1	2		1	2	○	○
	MC-H3L3	-1.0~50 kgf/Mpa/Bar	Screw hermetic reciprocating type chiller high pressure3 EA(FAN control 2 EA Included), low pressure3 EA Pressure switch and pressure gauge replacement (hermetic reciprocating type chiller, screw chiller)	2		3	3			○	○
	MPC-H4L2		Screw hermetic reciprocating type chiller high pressure1 EA(FAN control 3 EA Included), low pressure2 EA FAN step control,3-level pressure switch and pressure gauge replacement (air drier, capacity control Compressor, tandem, scroll chiller, screw chiller)	2		2	4			○	○
	MPC-H2L4		Screw hermetic reciprocating type chiller high pressure2 EA, low pressure 4 EA pressure switch and pressure gauge replacement (Water cooling, 4-level capacity control only)	2		4	2			○	○
	MPC-H1L5		Screw hermetic reciprocating type chiller high pressure1 EA, low pressure 5 EA pressure switch and pressure gauge replacement (water cooling, 5-level capacity control only)	2		5	1			○	○
	MPC-HL6		Screw hermetic reciprocating type chiller high pressure, low pressure 6 EA pressure switch and pressure gauge replacement (6-level capacity control only) ※ In case of high pressure warning, LP switch keeps OFF.	2		6	0			○	○

Assembly planar figure

DIGIPRESSURE®
Digital multi pressure Gouge&Switch

MPC-HLO,HLO-L2,HLOS

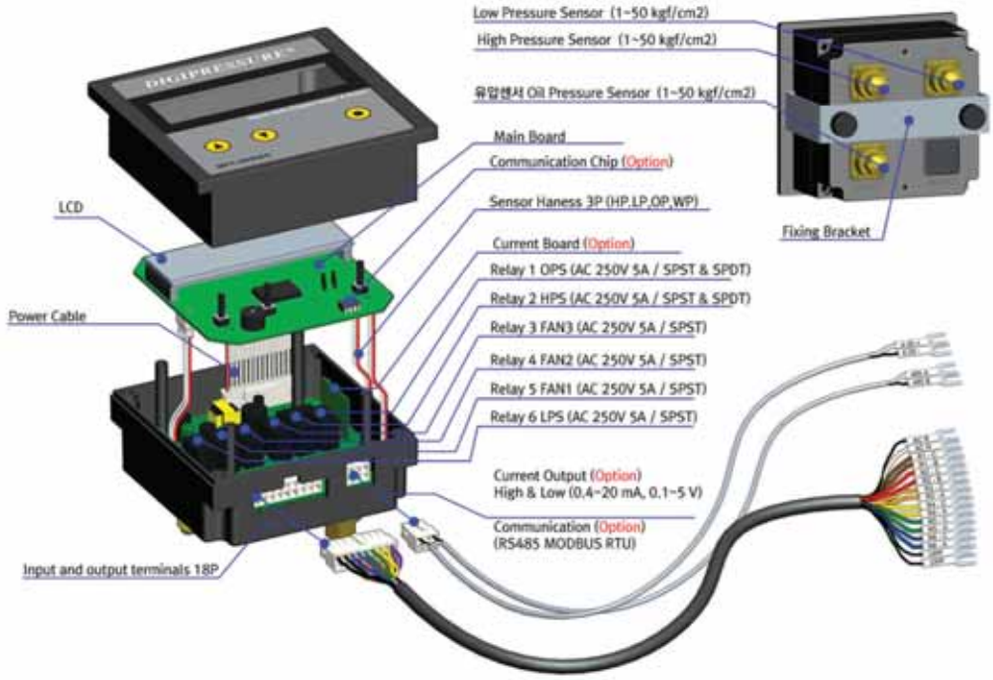

Assembly planar figure

DIGIPRESSURE®
Digital multi pressure Gouge&Switch

MPC-H2L4,H3H3,H4L2,H1L5,HL6

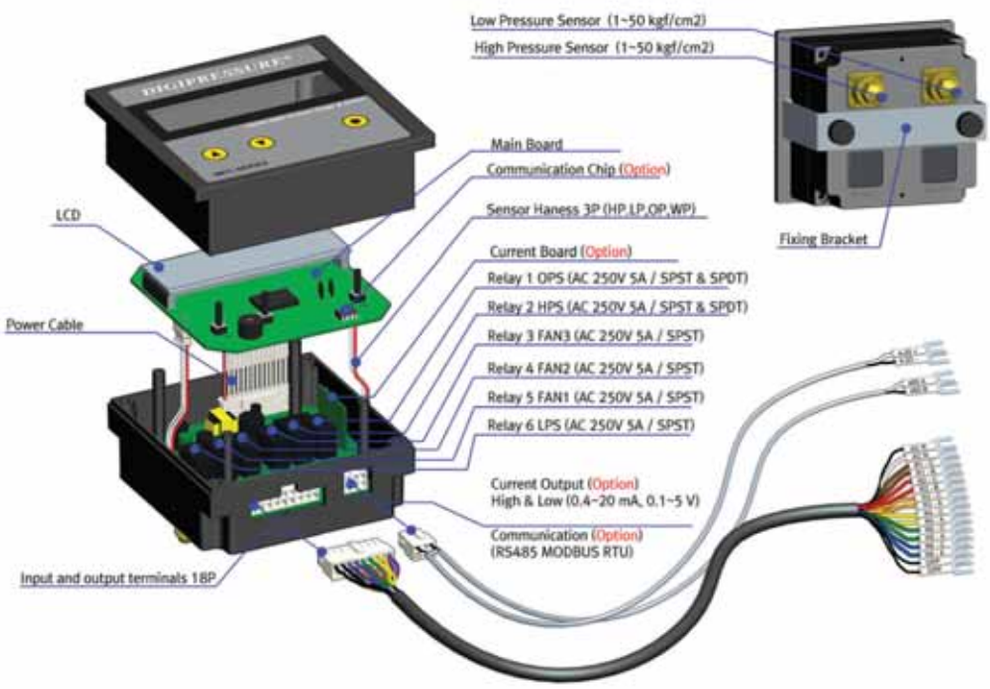

MPC-HLO

Pressure Sensor 3 EA
(low pressure/high pressure/oil pressure)

- Reciprocating semi-hermetic type oil pressure switch included
- Low pressure 1 EA, high pressure 1 EA, oil pressure switch 1 EA, FAN control 3 EA
- Low pressure ON / high pressure OFF delay timer embedded
- Pressure value set 0.1 kgf/㎠ input available
- Pressure unit (kgf/cm2, Mpa, Bar) Option when order is made

Alternative application figure

- Power supply: 100-240V~ 10% 50-60Hz,24VDC 주문사양
- Current : 200mA
- Indicator : C.LCD, B/L(BLUE)
- Pressure range : -1.0~50 Kgf/㎠ (Both Low & High, OIL)
- Output contact point: OP/HP : SPDT 250V/ 3A * 2EA,
  LP,FA1,2,3 : SPST 250/3A * 4EA
- Temperature : -20~60℃ RH 60%
- Sensor precision : 0.5%FS
- Communication applied : RS-485 MODBUS RTU (Option)
- Current output applied : (Option)
  (Current output range: 0-50Kgf/㎠ (4-20mA))
  PID control

MPC-HLO-L2

Pressure Sensor 3 EA
(low pressure/high pressure/oil pressure)

Low pressure switch 2 EA applied for capacity control
Compressor loading unloading control switch control

- Reciprocating semi-hermetic type oil pressure switch included
- Low pressure 1 EA, high pressure 1 EA, oil pressure switch 1 EA, FAN control 3 EA
- Low pressure ON / high pressure OFF delay timer embedded
- Pressure value set 0.1 kgf/㎠ input available
- Pressure unit (kgf/cm2, Mpa, Bar) Option when order is made

Alternative application figure

- Power supply: 100-220V ~ 50/60HZ, 24VDC order specification,
- Current: 200mA
- Indicator: C.LCD, B/L (BLUE)
- Pressure range: -1 ~ 50Kgf/㎠
- Output contact point: OP/HP: SPDT 250V / 3A 2EA,
  LP1,LP2 /FA1,2: SPST 250V/3A 4 EA
- Temperature: -20 ~ 60℃ RH 60%
- Sensor precision: 0.5%FS
- Communication applied: RS-485 MODBUS RTU order specification,
- Current output applied : high / low pressure: 4-20mA(1-5VDC , 0-10VDC)
  Current output range : 0-10,20,30,40,50 (Kgf/㎠)

MPC-HLOM

Pressure Sensor 4 EA
(low pressure/high pressure/Heavy pressure/oil pressure)

- Piston type 2-level Compressor control and screw 2-level Compressor control
- Low pressure 1 EA, high pressure 1 EA, oil pressure 1 EA, FAN control 3 EA Output(oil pressure -Heavy pressure control)
- Low pressure ON / high pressure OFF delay timer embedded
- Pressure value set 0.1 kgf/cm2 input available
- Pressure unit (kgf/cm2, Mpa, Bar) Option when order is made (Refrigerant temperature conversion function applied)

Alternative application figure

- Power supply : 100-240V ~ 10% 50-60hz, 24VDC주문사양
- Current : 200mA
- Indicator : C.LCD & B/L (BLUE)
- Pressure range : -1.0~50 Kgf/㎠ (Both Low, MID, OIL & High)
- Output contact point : HP,OP: SPDT 250V/ 3A * 2EA
  LP,FA1,2 : SPST 250V/3A * 4EA
- Temperature : -20~60℃ RH 60%
- Sensor precision : 0.5%FS
- Communication applied : RS-485 MODBUS RTU (Option)
- Current output applied : (Option)
  (Current output range: 0-50Kgf/㎠ (4-20mA))
  (Refrigerant temperature conversion function applied)

MPC-HLOS

Pressure Sensor 3 EA
(low pressure/high pressure/oil pressure)

- Screw type chiller oil pressure switch embedded type
- Low pressure 1 EA, high pressure 1 EA, Heavy pressure, oil pressure 1 EA, FAN control 3 EA
- Low pressure ON / high pressure OFF delay timer embedded
- Deviation ON delay timer embedded
- Pressure value set 0.1 kgf/㎠ input available
- Pressure unit (kgf/cm2, Mpa, Bar) Option when order is made

Alternative application figure

- Power supply: 100-240V ~ 10% 50-60hz
- Current : 200mA
- Indicator : C.LCD & B/L (BLUE)
- Pressure range : -1.0~50 Kgf/㎠ (Low, MID, OIL & High)
- Output contact point : HP,OP : SPDT 250V / 3A *2EA ,
  LP,FAN1,2,3 : SPST 250V / 3A
- Temperature: -20~60℃ RH 60%
- Sensor precision : 0.5%FS
- Communication applied : RS-485 MODBUS RTU (Option)
- Current output applied : (Option)
  (Current output range: 0-50Kgf/㎠ (4-20mA))
  (Refrigerant temperature conversion function applied)

MPC-HLOMS



Pressure Sensor 4 EA
(low pressure/high pressure/oil pressure /Heavy pressure)

- Kobe screw 2-level screw type chiller oil pressure switch embedded type
- Low pressure 1 EA, high pressure 1 EA, Heavy pressure,
- oil pressure 1 EA, FAN control 3 EA (high pressure-oil pressure control)
- Low pressure ON/ high pressure OFF delay timer embedded
- Pressure value set 0.1 kgf/㎠ input available
- Pressure unit (kgf/cm2, Mpa, Bar) Option when order is made

Alternative application figure

- Power supply : 100-240V ~ 10% 50-60㎐
- Current : 200mA
- Indicator : C.LCD & B/L (BLUE)
- Pressure range : -1.0~50 Kgf/㎠ (Low, mid, oil & High)
- Output contact point : HP,OP : SPDT 250V / 3A * 2EA
  LP,FAN1,2,3:SPST 250V / 3A
- Temperature : -20~60℃ RH 60%
- Sensor precision : 0.5%FS
- Communication applied : RS-485 MODBUS RTU (Option)
- Current output applied : (Option)
  (Current output range : 0-50Kgf/㎠ (4-20mA))
  (Refrigerant temperature conversion function applied)

MPC-HLOWS



Pressure Sensor 4 EA (low pressure2/high pressure2)

- Semi-hermetic type chiller high pressure1 EA, low pressure1 EA, oil pressure 1 EA, water pressure 1 EA and
- FAN control 2 EA pressure switch and pressure gauge replacement (chiller cooler applied)
- low pressure 1 EA, high pressure 1 EA, water pressure 1 EA, Deviation control 3 EA
- low pressure ON/ high pressure OFF delay timer embedded
- Pressure value set 0.1 kgf/cm2 input available
- Pressure unit (kgf/cm2, Mpa, Bar) Option when order is made

Alternative application figure

- Power supply : 100-240V ~ 10% 50-60㎐
- Current : 200mA
- Indicator : C.LCD & B/L (BLUE)
- Pressure range : -1.0~50 Kgf/㎠ (Low, mid, oil & High)
- Output contact point : HP,OP : SPDT 250V / 3A * 2EA
  LP,FAN1,2,3:SPST 250V / 3A
- Temperature : -20~60℃ RH 60%
- Sensor precision : 0.5%FS
- Communication applied : RS-485 MODBUS RTU (Option)
- Current output applied : (Option)
  (Current output range : 0-50Kgf/㎠ (4-20mA))
  (Refrigerant temperature conversion function applied)

MPC-H2L2

Pressure Sensor 4 EA
(low pressure/high pressure/oil pressure /Heavy pressure)

- Dual cycle control only
- Low pressure 2 EA, high pressure 2 EA, FAN control 2 EA
- Low pressure ON / high pressure OFF delay timer embedded
- Pressure value set 0.1 kgf/㎠ input available
- Pressure unit (kgf/㎠, Mpa, Bar) Option when order is made

Alternative application figure

- Power supply: 100-240V~ 10% 50-60hz
- Current: 200mA
- Indicator: 3 Digit FND x 2 for HP & LP
- Pressure range: -1.0~50 Kgf/cm2 (Low,mid,oil & High)
- Output contact point: HP,OP: SPDT 250V/ 3A *2EA
  LP,FAN1,2,3:SPST 250V/3A
- Temperature: -20~60℃ RH 60%
- Sensor precision: 0.5%FS
- Communication applied: RS-485 MODBUS RTU (Option)
- Current output applied: (Option)
  (Current output range: 0-50Kgf/cm2 (4-20mA))
  (Refrigerant temperature conversion function applied)

MPC-H3L3

Pressure Sensor 2 EA (low pressure/high pressure)

- Low pressure 3 EA, high pressure 3 EA
- Low pressure alteration control function embedded
- Low pressure ON/ high pressure OFF delay timer embedded
- Pressure value set 0.1 kgf/㎠ input available
- Pressure unit (kgf/cm2, Mpa, Bar) Option when order is made

Alternative application figure

- Power supply: 100-240V~ 10% 50-60hz
- Current: 200mA
- Indicator: C.LCD & B/L (BLUE)
- Pressure range: -1.0~50 Kgf/㎠ (Low,mid,oil & High)
- Output contact point : HP,OP: SPDT 250V/ 3A *2EA
  LP,FAN1,2,3:SPST 250V/3A
- Temperature: -20~60℃ RH 60%
- Sensor precision: 0.5%FS
- Communication applied: RS-485 MODBUS RTU (Option)
- Current output applied: (Option)
  (Current output range: 0-50Kgf/㎠ (4-20mA))
  (Refrigerant temperature conversion function applied)

MPC-H2L4

Pressure Sensor 2 EA (low pressure/high pressure)

- Low pressure 4 EA, high pressure 1 EA, FAN control 1 EA
- Low pressure alleration control function embedded
- Low pressure ON / high pressure OFF delay timer embedded
- Pressure value set 0.1 kgf/㎠ input available
- Pressure unit (kgf/㎠, Mpa, Bar) Option when order is made

Alternative application figure

- Power supply: 100~240V ~ 10% 50~60㎐
- Current: 200mA
- Indicator: C.LCD & B/L (blue)
- Pressure range: -1.0~50 Kgf/㎠ (Both Low & High)
- Output contact point: HP,OP : SPDT 250V / 3A * 2EA
  LP,FAN1,2,3:SPST 250V / 3A
- Temperature: -20~60℃ RH 60%
- Sensor precision: 0.5%FS
- Communication applied: RS-485 MODBUS RTU (Option)
- Current output applied: (Option)
  (Current output range: 0~50Kgf/㎠ (4~20mA))
  (Refrigerant temperature conversion function applied)

MPC-H4L2

Pressure Sensor 2 EA (low pressure/high pressure)

- Low pressure 2 EA, high pressure 1 EA, Deviation control 3 EA
- Low pressure ON / high pressure OFF delay timer embedded
- Pressure value set 0.1 kgf/㎠ input available
- Pressure unit (kgf/㎠, Mpa, Bar) Option when order is made

Alternative application figure

- Power supply: 100~240V~ 10% 50~60㎐
- Current: 200mA
- Indicator: C.LCD & B/L (BLUE)
- Pressure range: -1.0~50 Kgf/㎠ (Both Low & High)
- Output contact point: HP,OP : SPDT 250V / 3A * 2EA
  LP,FAN1,2,3:SPST 250V / 3A
- Temperature: -20~60℃ RH 60%
- Sensor precision: 0.5%FS
- Communication applied: RS-485MODBUS RTU (Option)
- Current output applied: (Option)
  (Current output range: 0~50Kgf/㎠ (4~20mA))
  (Refrigerant temperature conversion function applied)

MPC-H1L5

Pressure Sensor 2 EA (low pressure/high pressure)

- Low pressure 5 EA, high pressure 1 EA
- Low pressure alteration control function embedded
- Low pressure ON/ high pressure OFF delay timer embedded
- Pressure value set 0.1 kgf/㎠ input available
- Pressure unit (kgf/㎠, Mpa, Bar) Option when order is made

Alternative application figure

- Power supply: 100-240V~ 10% 50-60hz
- Current: 200mA
- Indicator: C.LCD & B/L (BLUE)
- Pressure range: -1.0~50 Kgf/㎠ (Both Low & High)
- Output contact point: HP,OP : SPDT 250V / 3A * 2EA
  LP1,3,4,5 : SPST 250V / 3A
- Temperature: -20~60℃ RH 60%
- Sensor precision: 0.5%FS
- Communication applied: RS-485 MODBUS RTU (Option)
- Current output applied: (Option)
  (Current output range: 0-50Kgf/㎠ (4-20mA))
  (Refrigerant temperature conversion function applied)

MPC-HL6

Pressure Sensor 2 EA (low pressure/high pressure)

- Low pressure 6 EA
- Low pressure alteration control function embedded
- Low pressure ON / high pressure OFF delay timer embedded
- Pressure value set 0.1 kgf/㎠ input available
  Pressure unit (kgf/㎠, Mpa, Bar) Option when order is made

Alternative application figure

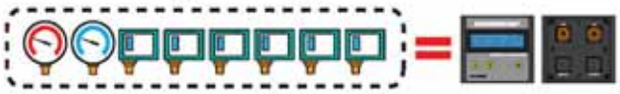

- Power supply: 100-240V~ 10% 50-60hz
- Current: 200mA
- Indicator: C.LCD & B/L (BLUE)
- Pressure range: -1.0~50 Kgf/㎠ (Both Low & High)
- Output contact point: HP,OP : SPDT 250V / 3A * 2EA
  LP3,4,5,6 : SPST 250V / 3A
- Temperature: -20~60℃ RH 60%
- Sensor precision: 0.5%FS
- Communication applied: RS-485 MODBUS RTU (Option)
- Current output applied: (Option)
  (Current output range: 0-50Kgf/㎠ (4-20mA))
  (Refrigerant temperature conversion function applied)

MPC-HLW

Pressure Sensor 3 EA
(low pressure/high pressure/water pressure (pneumatic))

Cooler, Air conditioning only

- Output: low pressure2 EA,high pressure1 EA,fan 2 EA, water pressure (pneumatic)1 EA
- Low pressure ON/ high pressure OFF delay timer embedded
- Pressure value set 0.1 kgf/㎠ input available
- Pressure unit (kgf/㎠, Mpa, Bar) Option when order is made

Alternative application figure

- Power supply: 100-240V~ 10% 50-60㎐
- Current: 200mA
- Indicator: C.LCD & B/L (BLUE)
- Pressure range: -1.0~50 Kgf/㎠ (Both Low & High,AIR(WATER))
- Output contact point: HP, LP2 : SPDT 250V / 3A * 2EA
  LP1,FAN1,2,WP1 : SPST 250V / 3A
- Temperature: -20~60℃ RH 60%
- Sensor precision: 0.5%FS
- Communication applied: RS-485 MODBUS RTU (Option)
- Current output applied: (Option)
  (Current output range: 0-50Kgf/㎠ (4-20mA))
  (Refrigerant temperature conversion function applied)

MPC-HLOW

Pressure Sensor 4 EA
(low pressure/high pressure/oil pressure /water pressure)

Semi-hermatic + pump only

- Low pressure 1 EA, high pressure 1 EA, water pressure 1 EA, Deviation control 3 EA
- Low pressure ON / high pressure OFF delay timer embedded
- Pressure value set 0.1 kgf/㎠ input available
- Pressure unit (kgf/㎠, Mpa, Bar) Option when order is made

Alternative application figure

- Power supply: 100-240V~ 10% 50-60㎐
- Current: 200mA
- Indicator: C.LCD & B/L (BLUE)
- Pressure range: -1.0~50 Kgf/cm2 (Both Low,Oil, water & High)
- Output contact point: HP, LP2 : SPDT 250V / 3A * 2EA
  LP1,FAN1,2,WP1 : SPST 250V / 3A
- Temperature: -20~60℃ RH 60%
- Sensor precision: 0.5%FS
- Communication applied: RS-485 MODBUS RTU (Option)
- Current output applied: (Option)
  (Current output range: 0-50Kgf/cm2 (4-20mA))
  (Refrigerant temperature conversion function applied)

DVS SERIES

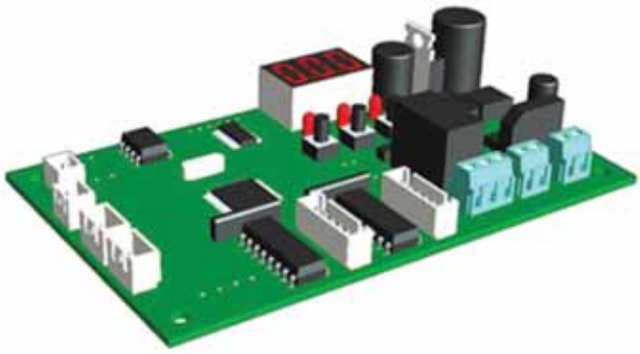

DVS is EEV controller that controls precise overheat, capacity, hot gas bypass by applying core expansion device to electronic expansion value in refrigerating, heat pump and chiller application cycle.
DVS consists of controller, pressure sensor, temperature sensor and electronic expansion valve which can be applied to chilling, freezing, heat pump, low temperature warehouse, show case and other devices.
DVS supports various action mode of electronic valves including Denpos, Sporaln, Emerson, Sanhwa, Dunhan, Saginomiya, Jahwa and others. (Uni-polar, bi-polar compatible board)

1. Super heat proportionate control action mode
2. Manual control action mode
3. Forced control action mode

DVS is a refrigerant that can be used currently. (R22, R134, R404, R407, R410, R507)
Others can be applied by order. DVS is applied to uni-polar / bi-polar type, and EEV applied to all types. And, it has RS485 communication (MODBUS) function for easy interface with other devices.

Installation picture

- Power: DL: EEV 2 EA applied SL: EEV 1 EA applied
- Control method: 1CH: 600mA 2CH: Within 1.2A
- Connection terminal: 0.36" 3DIGIT red
- Expansion valve: Pressure Sensor: 0.5V~4.5V 5VDC & 4-20mA temperature sensor: NTC 10Kohm
- Operation feature: UNIPOLAR / BIPOLAR STEP MOTOR MAX 600mA / Alarm output SPOT 250V/3A
- Operation condition: temperature -10~70 ℃ (without frost)
- Storage condition: 0.5%FS
- Sensor specification: RS-485 MODBUS RTU

Application installation map

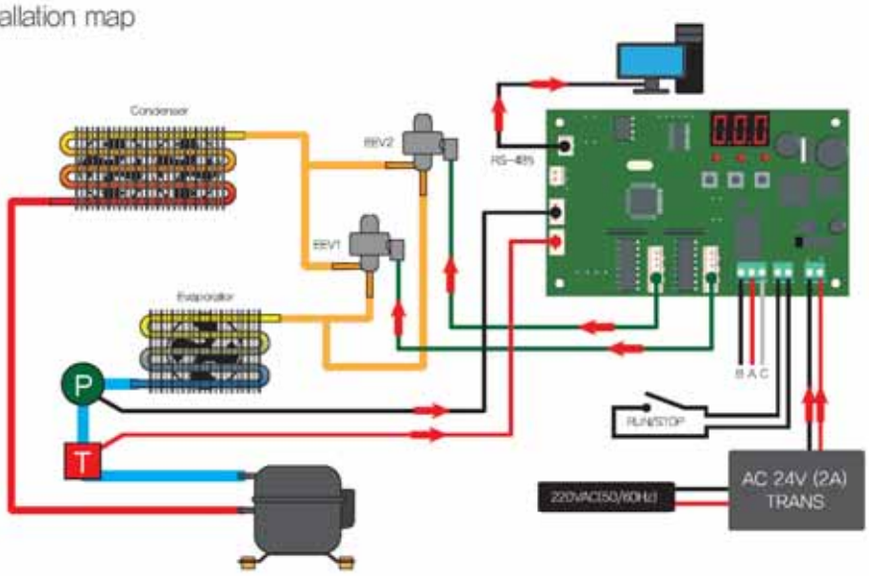

Specification

DVS SERIES		Specification	Funtion	Sensor	OUTPUT Output	OUTPUT EEV	OUTPUT Input	Current (Option)	RS-485 (Option)
	DVS-DL	DUAL electronic expansion valve control device	DVS is EEV controller that controls precise overheat, capacity, hot gas bypass by applying core expansion device to electronic expansion value in refrigerating, heat pump and chiller application cycle. DVS consists of controller, pressure sensor, temperature sensor and electronic expansion valve which can be applied to chilling, freezing, heat pump, low temperature warehouse, show case and other devices	2	1	2	1	○	○
	DVS-SL	SINGLE electronic expansion valve control device		1	1	1	1	○	○

GPT SERIES

GPT – 010 product specification

Pressure range : –1 ~10, 30, 50,7 kgf/㎠

POWER : 8~30 VDC

OUTPUT : 4 – 20mA (2–WIRE)

1 – 4VDC

0.5 – 4.5VDC

GPT - MODULES

Pressure range : –1 ~ 50 kgf/㎠

Temperature : –20 ~ 60℃ RH 60%

Sensor precision : 0.5% FS

OUTPUT : 0–50 Kgf/㎠ (4–20mA)

ACCESSORY & PARTS


Pressure switch


Pressure switch

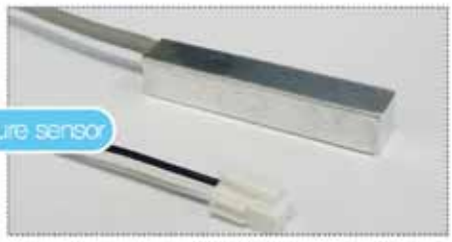
Temperature sensor


Leakage detector


Level switch


Spark killer


Inverter


Converter (485 communication)

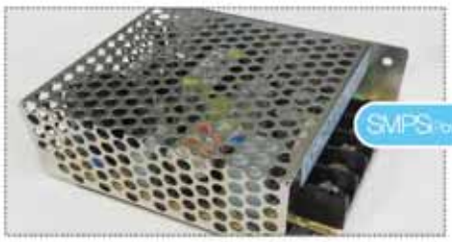
SMPS (Power supply device)


Transmitter


MPC CABLE (18P)


DPC CABLE (10P)


Communication/current CABLE (2P)


MPC GAUGE PANEL

Water Chiller

Ultra small cooler

1. Water tank STS corrosion and rust proof technology applied
2. Heat exchanger coil STS technology applied
3. Eco-friendly refrigerant used 134a applied
4. High lift valve /flux water pump applied
5. Digital temperature controller applied
6. Low temperature cooler developed, small cooler developed, produced and supplied

– A Type

– A-A Type

– B Type

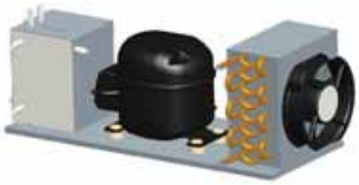

– B-B Type

– C-A Type

– D Type

– F Type

Cooler Series

Cooler A Type

Cooler & Chiller mixed type

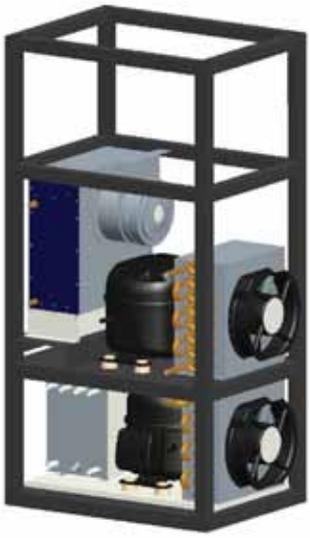

Project Date 20 . .